Tension screen

Installation Manual

To the owner

Thank you for choosing a HIVILUX tension screen for your home.
This deluxe model delivers superior performance for video.

Please take a moment to review this manual; it will help ensure you easy and quick installation. Some important notes will help you understand how to maintain the screen so that prolong the service life of the product.

General Notes

1.Please read the user manual carefully, this will help you finish installation quickly.
2.Please make sure that no other objects such as power switches, outlets, furniture, ladders, windows,etc. occupy the space designated to hang the screen.
3.Regardless if the screen is installed inside or on the wall, make sure that the proper mounting anchors are used and that the weight is supported appropriately by a strong and structurally sound surface just as any large and heavy picture frame should. (Please consult a home improvement specialist for the best advice on installation.)
4.When not in use, roll up the screen to protect from dirt, grime, paint or any other impurities.
5.When cleaning, use a damp soft cloth with warm water to remove any marks on the casing or screen surface.
6.Never attempt to use any solutions, chemicals or abrasive cleaners on the screen surface.
7.To avoid damaging the screen, do not touch the material directly with your fingers, tools or any other abrasive or sharp objects.
8.Spare parts should be placed out of reach for small children in accordance with household safety.

Packing List

Item	Qty
IR Remote Control	1PCS
RF Remote Control	1PCS
Wireless Triger	1PCS
Adjustment Tool	1PCS
Wall Bracket	2PCS
Hook	2PCS
Screws	4PCS
Rubber Plug	4PCS
Installation Manual	1PCS

Prepare works before installation

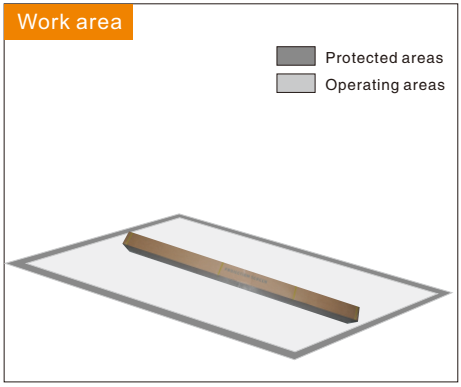

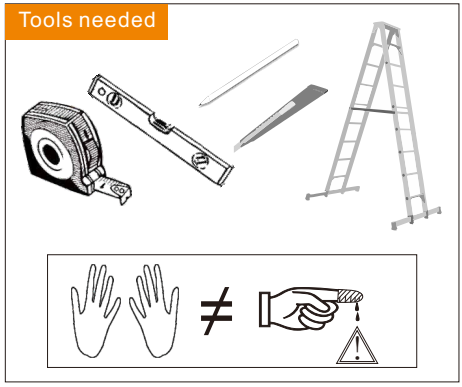

Required tools and parts

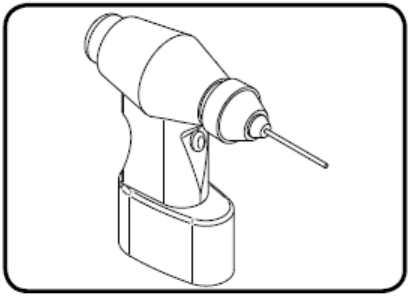

Electric drill with drill and driver bits

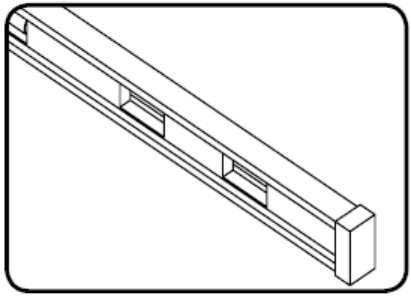

Spirit level and pencil for marking

Strectching out the projector screen
Press DOWN key of the switch and the sreen will automatically strectch and then stop when it was fully stretched out.
Rolling back the projector screen
Press UP key of the switch and the sreen will automatically roll up into the metal drum and stop when the screen was fully rolled up.
Stopping the projector screen
Press the middle part of the switch to stop the screen,and it can be stopped at any position.

IR Remote Control

RF Remote Control

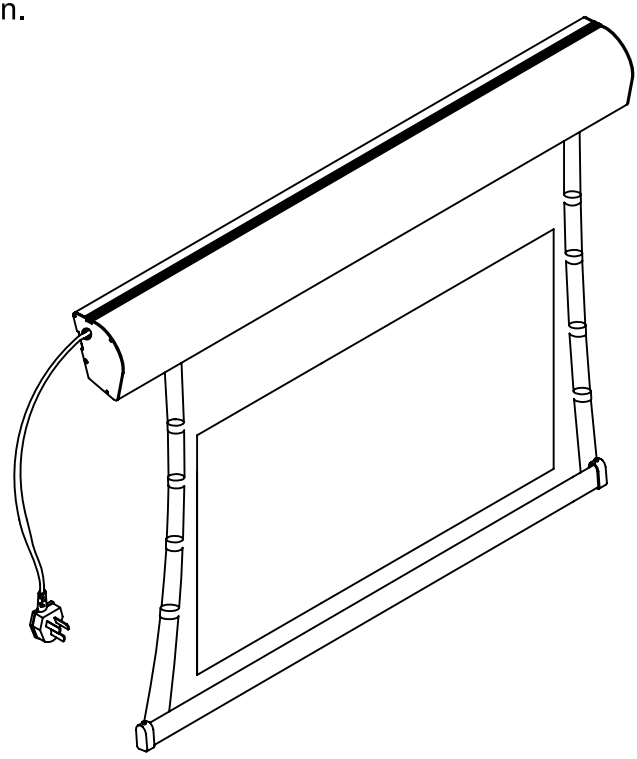

Mounting the screen

The screen can be installed in a 2 different ways with common household tools.

Wall mounting

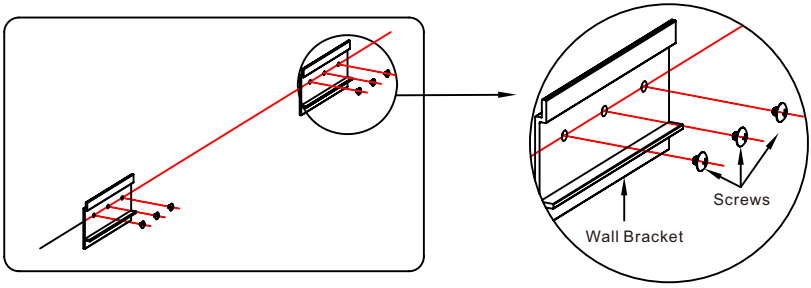

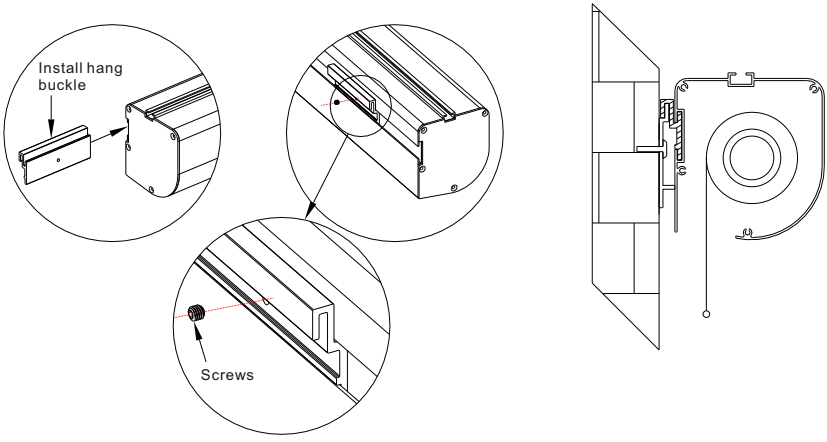

Ceiling mounting

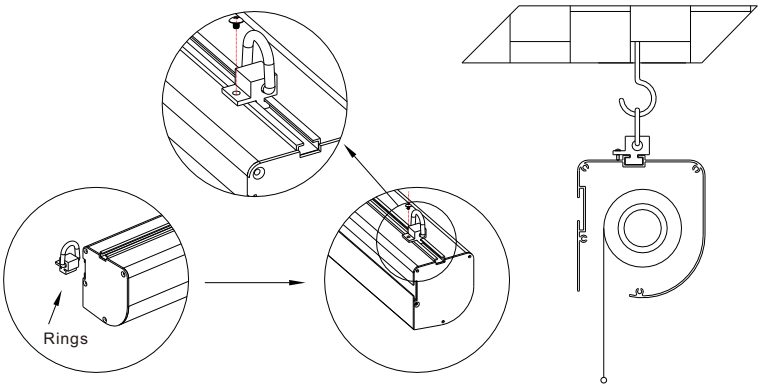

Note:

1、The switch should be positoned on STOP when the screen is not in use.

2、Before rolling back the screen,please make sure that there is no insect,dust or other object on the screen.

3、The screen can be roll up and down continually,but continous times of rolling up and down should not exceed 5 minutes to prevent overheat of the motor.In case of continous use necessary,you should wait until the motor cools down.

Screen Care

The surface of your screen is delicate. Special attention to these instructions should be followed when cleaning.

1. A draftsman-style brush may be used to lightly whisk away any loose dirt or dust particles.

2 .For tougher spots, use a solution of mild detergent and water.
Rub lightly using a sponge. Blot with a damp sponge to absorb excess water. Residual water marks will evaporate within a few minutes.

3 .Do not use any other cleaning materials on the screen. Contact the factoryif you have questions about removing difficult spots.

4 .Use a lint brush to remove any dust on the casing.

Warranty

HIVILUX's warranty covers defects in workmanship and fabrics, provided screen has been installed in a normal environment and maintained according to the written instructions.

Surface fabric(s) and casing are guaranteed for three (3) years from date of installation.

Motors, motor controllers, and assembly hardware are guaranteed for one (1) years – including parts and labor – not to exceed 15 months from date of invoice.

WWW. HIVILUX. DE